Community
Application Solutions

iHP1599

15-INCH, LARGE FORMAT 2-WAY, INSTALLATION LOUDSPEAKER

Applications

- Theatre/Auditoria.
- Houses of Worship.
- Dance Clubs/Discotheques.
- Live Sound Reinforcement.
- Multi-Use Sports Facilities & Stadiums.
- Audio Visual.

Features

- 90° x 90° Rotatable Horn Pattern.
- Large format waveguide delivers excellent pattern control.
- 1.4” (36 mm) Exit / 2.87” (72.2mm) VC HF Device.
- 15” (380mm) LF Device.
- Passive and Biamp Operating Modes.
- (23) Load-rated M10 Rigging Points.
- (4) M8 Omnimount™ 120 inserts.
- Robust Tuf-Coat™ Finish.
- Dual NL4-compatible locking connectors and Barrier Strip Inputs.

iHP1599 OPTIONS	
“W” suffix	**White** paint finish with white grille and hardware
“U” suffix	**Unfinished** with black grille and hardware
“P” suffix	**Portable** version with built-in handles, rubber feet and stacking cups on four recessed corner mounting points

Description

The iHP1599 is a premium quality, large format, full range loudspeaker system. The driver complement consists of a 15” (380mm) high power low frequency driver and a 1.4” (36mm) exit / 2.87” (72.2 mm) edgewound voice coil compression driver. The large format rotatable horn flare delivers well controlled 90˚ x 90˚ dispersion, and utilizes high order crossovers to minimize band overlap.

The well controlled off-axis response enhances system performance when combined with other iBOX Mid/Hi and subwoofer elements in clusters / arrays. The i115S and i215S subwoofer elements share the same cabinet profile and have been designed for integration with the iHP1599 for aesthetically pleasing clusters / arrays.

The iHP1599 can be used in both passive and bi-amp operating modes. The passive mode is designed to deliver outstanding performance without the use of a processor, while the bi-amp mode allows greater system flexibility. A compatible processor can be used to enhance the LF response, provide a crossover function for use with iBOX subwoofer elements, and much more.

The rugged 13-ply Baltic birch enclosure is finished with Community’s new, robust, smooth Tuf-Coat™ finish. The enclosure also incorporates 23 load-rated M10 rigging points and 4 M8 Omnimount™ 120 inserts in the rear of the enclosure. Simple and flexible installation is achieved using optional hardware from an extensive range designed specifically for the iBOX series.

See the iBOX Hardware Guide for more details.

Community Professional Loudspeakers
333 East Fifth Street, Chester, PA 19013-4511 USA
610-876-3400 • Fax 610-874-0190
www.communitypro.com

iHP1599

15-INCH, LARGE FORMAT 2-WAY, INSTALLATION LOUDSPEAKER

Community
True to Specification

Line Drawings and Specifications

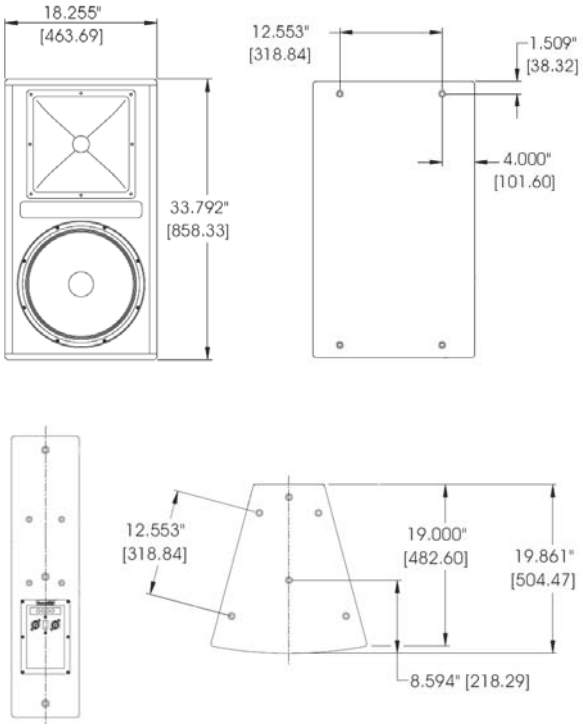

Loudspeaker Type:	2-Way full-range
Frequency Response (+/-3dB):	60 Hz - 18 kHz
-10dB Point:	45Hz
Max Input Ratings (Passive):	RMS 600W, Program 1500W
Max Input Ratings (Biamp):	LF: RMS 600W, Program 1500W @ 8 Ohms
	HF: RMS 90W, Program 180W @ 8 Ohms
Recommended Power Amplifier:	1,200W to 1,800W @ 8 Ohms
Sensitivity 1W/1m:	101 dB SPL
Maximum Output:	129 dB SPL / 136 dB SPL (peak)
Nominal Impedance:	8 Ohms
Min Impedance:	5.7 Ohms
Nominal -6dB Beamwidth:	90° H x 90° V
Crossover Frequency:	1.0 kHz
Recommended Signal Processing:	60Hz 24dB / Octave High pass filter
Drivers:	LF (1) 15" HF (1) 2.87" / 1.4" Exit
Input Connection:	(2) NL4-compatible locking connectors (4) Terminal Barrier Strip
Controls:	Operating Mode Switch (Biamp / Passive)
Enclosure:	13-ply Baltic birch 30° total pitch angle
Mounting / Rigging Provisions:	(23) M10 flying / rigging inserts (4) M8 Omnimount™ Inserts
Grille:	Steel, foam backed.
Optional Accessories:	Mounting / Rigging hardware - See the iBOX Hardware Guide for more information.
Dimensions:	Height: 33.79 in. / 858 mm
	Width: 18.26 in. / 464 mm
	Depth: 19.86 in. / 505 mm
Weight:	96 lbs. / 43.5 kg
Shipping Weight:	112 lbs. / 50.8 kg

1. Sensitivity: Free field pink noise measurement at 35 ft / 10.6 m at 50% power; extrapolated to 1 meter and an input of 2.83 volts RMS.
2. Watts: All wattage figures are calculated using the rated nominal impedance.

Measurements

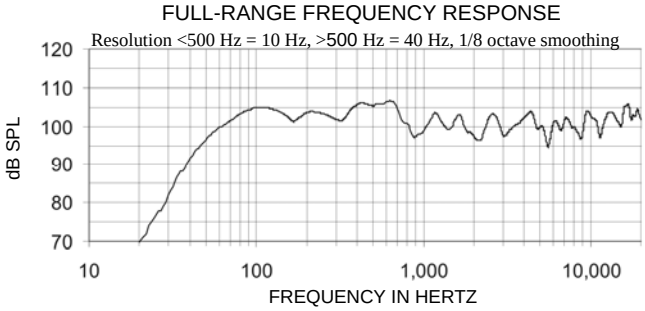

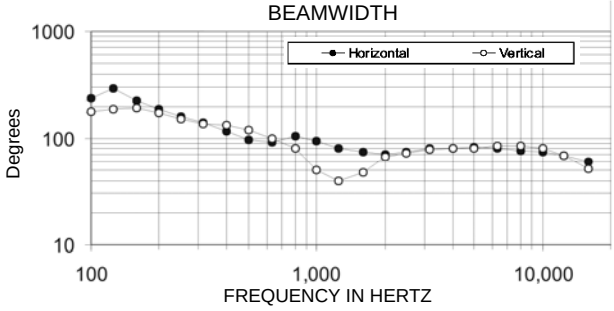

Architects

The loudspeaker system shall be a two-way, full-range bass reflex trapezoidal design with one 15 in. (380 mm) Cool-Coil™ LF driver and one 1.4 in. exit HF driver with a titanium diaphragm mounted to a 90° x 90˚ HF fiberglass horn. Drivers shall be connected to an integral crossover with a crossover frequency of 1.0 kHz. There shall be one four-terminal barrier strip and two NL4-compatible locking connectors. The terminal panel shall have a switch to select Biamp or Passive operating modes. The loudspeaker enclosure shall be 13-ply Baltic birch plywood and shall be fitted with 23 X M10 and 4 X M8 flying/rigging inserts and finished with Tuf-Coat™. The front of the enclosure shall be fitted with a 16 gauge perforated steel grille backed with foam. The system shall have an amplitude response of 60 Hz to 18 kHz (+/- 3 dB), input capability of 69V RMS, 101 dB sensitivity at one meter and 2.83V / 8 ohms nominal impedance. The nominal dispersion shall be 90° H x 90° V from 1.0 kHz to 10 kHz. The loudspeaker shall be 33.79 in. (858 mm) H x 18.26 in. (464 mm) W(front) x 8.26 in.(210mm) W(rear) x 19.86 in. (505mm) D and weigh 96 lbs (43.5 kg).

Community Professional Loudspeakers
333 East Fifth Street, Chester, PA 19013-4511 USA
610-876-3400 • Fax 610-874-0190
www.communitypro.com